MQR型镗孔加工 MQR type boring

HAFFMAN High Precision Tools

MQR □ R□L□

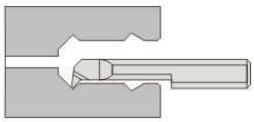

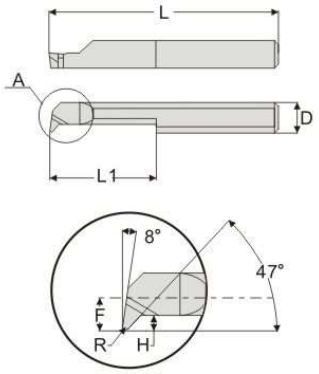

A 放大
Zoom in

技术参数(Technical parameters):

D	MODEL	L	L1	R	F	最小孔径 Minimum bore diameter
4.0	MQR 4 R0.2 L10	50	10	0.2	1.8	4.1
	MQR 4 R0.2 L15	50	15	0.2	1.8	4.1
5.0	MQR 5 R0.2 L15	50	15	0.2	2.3	5.1
	MQR 5 R0.2 L22	50	22	0.2	2.3	5.1
6.0	MQR 6 R0.2 L15	50	15	0.2	3.3	6.1
	MQR 6 R0.2 L22	50	22	0.2	2.3	6.1